914P

Cryogenic temperature PE accelerometer



Description

The model 914P is an extreme low temperature operating piezoelectric accelerometer designed specifically for measuring vibration in cryogenic temperature applications. The unit is hermetically sealed and ideal for use in extreme environments. This sensor is the industry standard for vibration/shock accelerometers. The model 914P features a 10-32 threaded mounting hole. The accelerometer is a self-generating device that requires no external power source for operation. Model 914P operating in piezoelectric compression mode. These specially designed exhibit low base strain sensitivity and excellent output stability over time. Signal ground is connected to the outer case of the unit, the isolated mounting base is available. The accelerometer features a 10-32 top connector and requires a low-noise coaxial cable for error-free operation. Senther's model 11P-3 is a 10-32 to BNC breakout low noise cable for the sensor.

Features

- High sensitivity/resolution
- Top connector/cable
- Adhesive or stud mounting
- Hermetic seal
- Extreme low temperature
- Low pyroelectric effect

Application

- Engine research
- Cryogenic temperatures test
- Superconducting test
- Modal analysis
- Aircraft testing

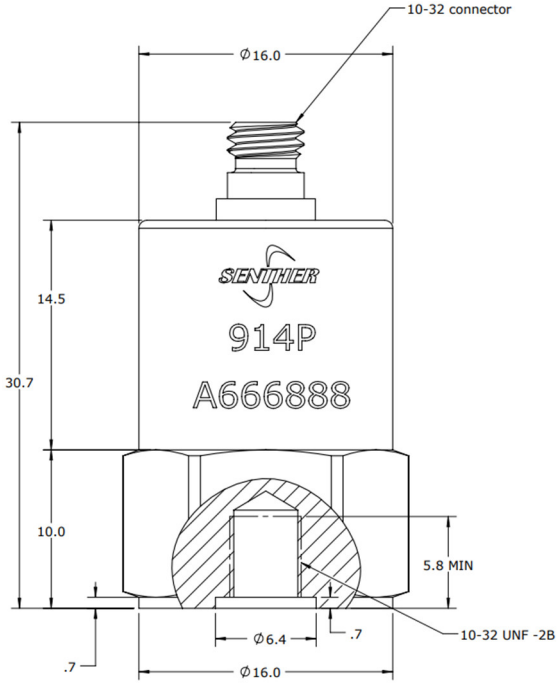

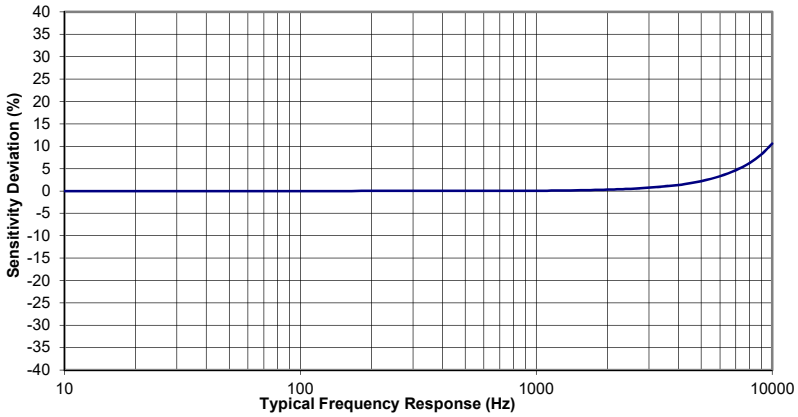

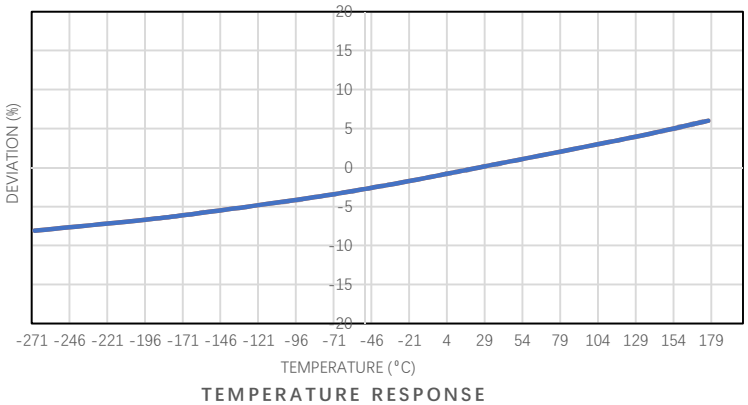

TEMPERATURE RESPONSE

Specification

All values are typical at +24°C（+75°F）and 100Hz unless otherwise stated

ITEM	SPEC.	UNIT
SENSITIVITY, TYPICAL	3.9	pC/g
SENSITIVITY, MINIMUM	3	pC/g
FREQUENCY RESPONSE ±5%	1-4000	Hz
FREQUENCY RESPONSE ±1dB	1-6000	Hz
RESONANT FREQUENCY	>20	kHz
TRANSVERSE SENSITIVITY	<5	%
TEMPERATURE RESPONSE，-269 to +177°C	±10	%
LINEARITY	±1	%FSO
DYNAMIC RANGE	±500	g
SHOCK LIMIT	±2500	g

PARAMETERS	VALUE	UNITS
INTERNAL RESISTANCE (@100Vdc)	>100	MΩ
CAPACITANCE (NOMINAL)	220	pF
GROUNDING	Case Grounded	
INSULATION RESISTANCE (@100Vdc)	>100	MΩ
OPERATING TEMPERATURE	-269 to +177°C	ºC
HUMIDITY	Hermetically Sealed	
MATERIAL (Casing)	Stainless Steel	
SENSING ELEMENT	Piezo Crystal	
WEIGHT	34	Grams
MOUNTING TORGUE	6(0.7)	lb-in(Nm)

Accessories

Calibration certificate included.

Part Number	Description	Availability
PM0231	Mounting stud 10-32 to 10-32 thread	One stud Included
PM0356	Mounting stud 10-32 to M5 thread	
MB0014	Magnet mounting adapter	Optional
PM0276	Adhesive mounting adapter	Optional
11P-3	3 meter low noise mating cable with 10-32(male) to BNC(male) connector	Optional
10P-3	3 meter low noise mating cable with 10-32(male) to 10-32(male) connector	Optional
IN-06	3 channels charge converter	Optional
IN-07	1 channel inline charge converter	Optional
IN-3062	8 channels data acquisition system	Optional

Measurement configuration

Sensor	Mating cable	Charge converter	BNC cable	Data acquisition	Computer
					

Ordering information

914	P
Model	**Output signal**
914	P=Charge output

Senther reserves the right to make changes to any products or technology herein to improve reliability, function or design. Senther does not assume any liability arising out of the application or use of any product or circuit described herein; neither does it convey any license under its patent rights nor the rights of others.