572PM3

High temperature PE accelerometer



Description

The model 572PM3 is a light weight piezoelectric accelerometer designed specifically for measuring high temperature vibration on structures and test purpose. The unit is hermetically sealed and ideal for use in extreme environments. This sensor is the industry standard for vibration/shock accelerometers. The model 572PM3 features a 10-32 threaded mounting hole. The accelerometer is a self-generating device that requires no external power source for operation. Model 572PM3 operating in annular shear mode. These specially designed crystals exhibit low base strain sensitivity, high resonance frequency, and excellent output stability over time. Signal ground is connected to the outer case of the unit. The accelerometer features a M3 side connector and requires a low-noise coaxial cable for error-free operation. Senther's model 12P-L is a M3 to BNC breakout low noise cable for the sensor.

Features

- Side connector/cable
- Adhesive or stud mounting
- Hermetic seal
- Annular shear mode
- Wide frequency response

Application

- Engine research
- Shock testing
- Modal analysis
- Aircraft testing
- Auto exhaust system

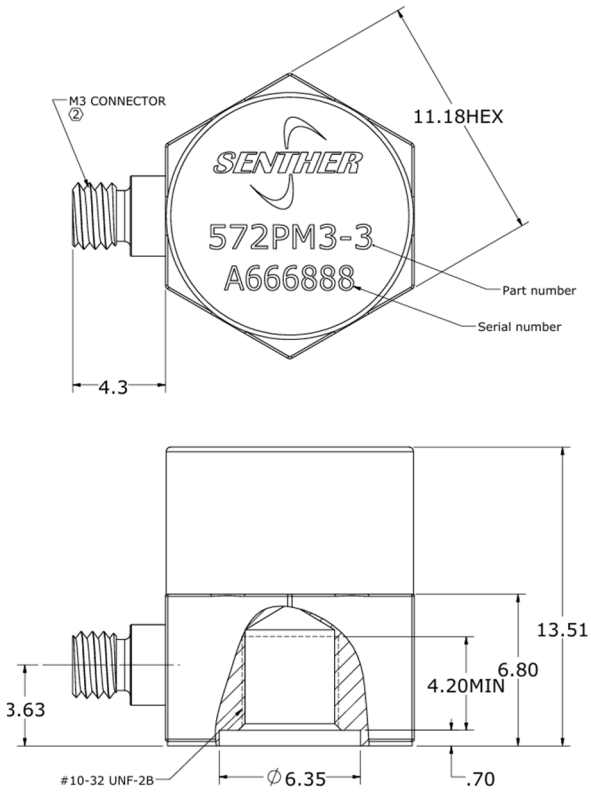

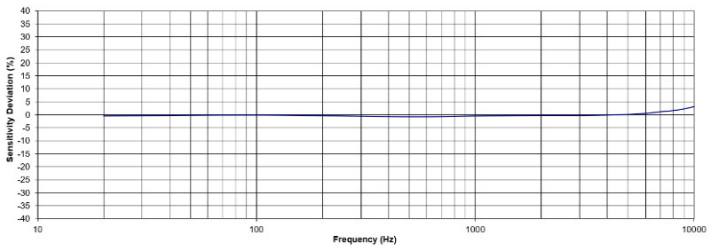

Typical Frequency Response

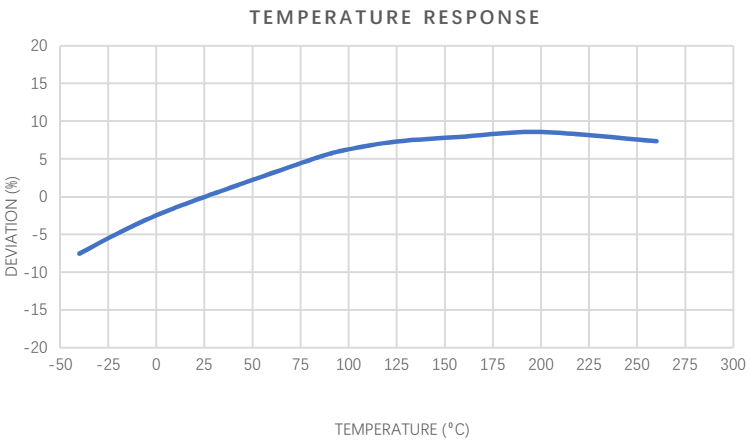

Specification

All values are typical at +24°C（+75°F）and 100Hz unless otherwise stated

Parameters	Value		Units
Sensitivity Typical	3.5	7	pC/g
Sensitivity Minimum	3	6	pC/g
Frequency Range ±5%	1-7000	1-7000	Hz
Frequency Range ±1dB	0.8-10000	0.8-10000	Hz
Frequency Range ±3dB	0.5-15000	0.5-15000	Hz
Resonant Frequency	43	38	KHz
Linearity	±1/1000g	±1/500g	% FSO
Transverse Sensitivity	<5	<5	%
Dynamic Range	±5000	±5000	g
Shock Limit	±10000	±10000	g

Parameters	Value	Units
Internal Resistance(@100Vdc)	>10	GΩ
Internal Resistance @ +260°C	>10	MΩ
Capacitance (Nominal)	630	pF
Grounding	Case Grounded	
Insulation Resistance (@100Vdc)	>100	MΩ
Operating Temperature	-73 to +260	°C
Humidity	Hermetically Sealed	
Material(Casing)	Titanium Alloy	
Sensing Element	Piezo Ceramic	
Weight	5.1	Grams
Mounting Torgue	6(0.7)	lb-in(Nm)

Accessories

Calibration certificate included.

Part Number	Description	Availability
PM0231	Mounting stud 10-32 to 10-32 thread	One stud Included
PM0356	Mounting stud 10-32 to M5 thread	
MB0012	Magnet mounting adapter	Optional
PM0276	Adhesive mounting adapter	Optional
12P-3	3 meter low noise mating cable with M3(male) to BNC(male) connector	Optional
14P-3	3 meter low noise mating cable with M3(male) to 10-32(male) connector	Optional
IN-06	3 channels charge converter	Optional
IN-07	1 channel inline charge converter	Optional
IN-3062	8 channels data acquisition system	Optional

Measurement configuration

Sensor	Mating cable	Charge converter	BNC cable	Data acquisition	Computer
					

Ordering information

572	**PM3**	**-**	**7**	**-**	**A**
Model	Output signal	**-**	Typical sensitivity	**-**	Mounting stud
572	P=Charge output M3=M3 connector	**-**	3.5=3.5pC/g 7=7pC/g	**-**	A= 10-32 to 10-32 B= 10-32 to M5 C*=Special

Senther reserves the right to make changes to any products or technology herein to improve reliability, function or design. Senther does not assume any liability arising out of the application or use of any product or circuit described herein; neither does it convey any license under its patent rights nor the rights of others.